Cristina®

For Whom Insist on The Best

Shea

for life



charge with a rejuvenating spa bath



Release all the burdens you shoulder and indulge luxuriously in the total rejuvenation of your body and soul with truly invigorating water streams in Cristina® 'Spa Bath' Tubs. Start a brand new day with a brand new you





Behold the powers of water

The therapeutic powers of water can be applied to the science of stream therapy in ma
different ways. Massaging water flows gently yet effectively refreshes and energizes the bo
Water also stimulates blood circulation and restores body balance.

Every time you luxuriate in the world-class spa-like bathtubs from Cristina©, you benefit from t
perfect synergy between the natural wonders of water and man-made therapeutic technologie
The unique 'Feel Control' feature lets you fine-tune all sophisticated functions of your elega
bathtub with your fingertips. Water-massaging pressure is adjustable
with 7 comfortable levels.

Relaxing in a Cristina© 'Spa Bath' Tub is simply the best way to unwind and recharge for a
challenges the brand new day will bring.

QUA COOL

NEW ARRIVAL

x 150 x 55 cm.

gner: Chat Kamioka / Japan

TH FAUCET	Standard colour	Premium Colour
irlpool + Airpool (CT-AC 190150 FWA) tandard Jets, 18 Airpool Jets	225,000.-	230,000.-

FAUCET
LEVEL SYSTEM
OZONE GENERATOR
FEEL CONTROL
CHROMOTHERAPY 2 LIGHTS

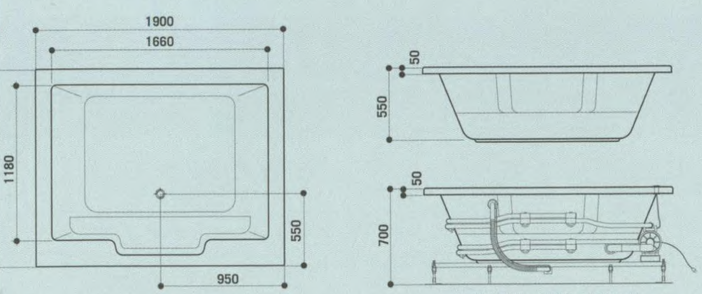

SIZE 1900 x 1500 x 550 MM.

duct Under License
e is not including tropical rain



Feel Control

New innovative tub control system that fulfills your feeling of absolute revitalization

All of our bathtubs are specially created for your happyness

Not only concentrating with great shape and serviceable bath tubs, but Cristina also make the strong efforts to continue searching the latest technology to help the user more saving, safe and convenient, especially desirable for your feeling. And today Cristina innovate new technology to enhance yourbath more relexing along with extremely convenient fufilled your feeling. Feel Control now befits thelatest leading innovation of bath control happens the user a pleasant feeling of bath. With its full function computerized control panel which is easy to use through its instant bath programs, and providing different control peds to respond to whateverdesires, the user will be satisfied at all.

Power
On-off system
System is controlled by water level sensor.
The system will not work if the water level is low.

Pump1
On-off Pump 1 to control the fuction of standard jets(Choosing to use as Normal jet or Pulsation).

Pump2
On-off Pump 2 to control the fuction of Back and foot jets(Choosing to use as Normal jet or Pulsation).

+Plus

Blower
On-off the air bubble system enable to adjust the air pressure as Manual or Rhythm by Plus/Minus buttons.

- Minus

Light auto
Turn on/off light in Automatic mode.
light will change fromone color to another in every 5 second.

Light manual
Turn on/off light in manual mode.
light can be selected at any desired color.



Tropical Rain

Delight in a unique stream therapy that offers soothing massag precipitation that stimulates blood circulation and eases away the tension and worries amassed during a long hard day.
Drops of refreshing rainfall are evenly distributed throughout the len of this elegant rectangular bathtub. Water pressure can be fine-tune best suit your needs at all times. So, put your feet up, head down, watch all weariness be trickled away by the relaxing rainfall.

ZURE

NEW ARRIVAL

x 150 x 55 cm.

ner : Chat Kamioka / Japan

H FAUCET	Standard colour	Premium Colour
rlpool + Airpool (CT-AZ 200150 FWA) andard Jets, 18 Airpool Jets	235,000.-	240,000.-

AUCET
EVEL SYSTEM
ZONE GENERATOR
EEL CONTROL
HROMOTHERAPY 2 LIGHTS

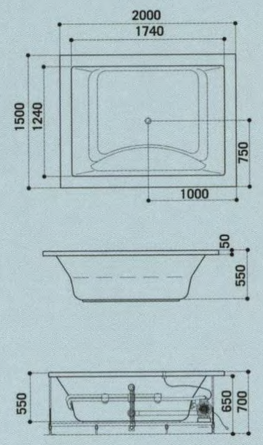

SIZE 2000 x 1500 x 550 MM.

uct Under License
e is not including tropical rain



TATTOO

220 x 130 x 55 cm.

Designer : Phumdof Joof / Germany

NE
ARR

WITH FAUCET	Standard colour	Premium C
Whirlpool + Airpool (CT-TT 220130 FWA) 8 Standard Jets, 12 Airpool Jets, 12Micro Jets	255,000.-	260,00

- FAUCET
- LEVEL SYSTEM
- OZONE GENERATOR
- ELECTRONIC CONTROL
- GRATING 1 SET
- CHROMOTHERAPY 2 LIGHTS

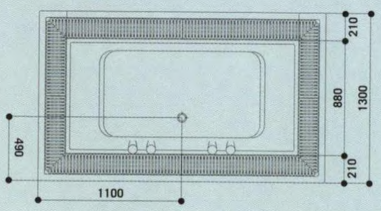

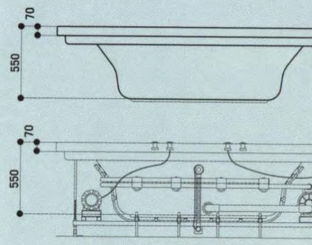

SIZE:2200x1300x550 MM.



SPIRE 220130

x 130 x 55 cm.

ner: Phundof Joop / Germany

H FAUCET	Standard colour	Premium Colour
rlpool + Airpool (CT-AS 220130 FWA) ndard Jets, 12 Airpool Jets, 12Micro Jets	245,000.-	250,000.-

AUCET
EVEL SYSTEM
ZONE GENERATOR
LECTRONIC CONTROL
RATING 1 SET
HROMOTHERAPY 2 LIGHTS

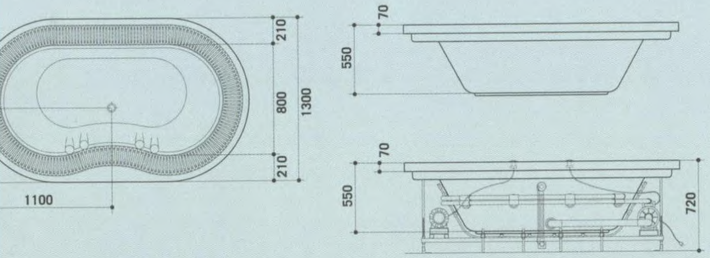

SIZE 2200 x 1300 x 550 MM.



luct Under License



Experience what are the technology-to-nature to create spa therapies Cristina has inspired.

Chromatherapy

Color has a tangible effect on feelings of well-being and comfort. It's even believed that color can affect our mental and emotional states. Cristina overflow bathtub with chromatherapy option not only makes the innovative retreat but also offers a luxurious opportunity to immerse yourself in pure, healing hues. After slip into the peaceful warmth of cascading water, just let each color gently wash over you. The sequence lasts about one minute, and then repeats, but the simple push of a button lets you rest on any color you like. Each color has its own qualification of retreat. White composed of all the colors of the light spectrum, offering soothing relief to the body, while violet is an imaginative and intuitive tone. Green renews and promotes harmony and balance. Blue calms the senses and inspires the soul. Yellow makes you feel hopeful, illuminating and adventurous. Red brings feeling of courageous, energizing.

Hydrothermal therapy

Hydrothermal therapy is the use of soaking tubs which water and temperature are involved in. Generally, heat quiets and soothes the body. Cold, in contrast, stimulates and invigorates. Water temperature should be 92 to 94 degree F. except when used for loosening tense muscles and reducing the pain of stress-related backaches, the temperature should be 102 degree F to 106 degree F. A hot bath is used for relaxation, lowering the body's energy. It stimulates sweating and increases the elimination of toxins. To enhance the process, you might add fresh herbs or the essential oils to the bath. Adding Epsom salt to the bath helps arthritis and rheumatism; and sea salt promotes healing, reduces inflammation and prevents infection.

A cold bath is highly invigorating! Cold water applied to any part of the body causes an initial chilling effect, followed by dilation of the small blood vessels in the skin. The increased blood flow suffuses the whole area with a reddish, warming, and healthy glow. Please note, however, that this should be for no longer than 15 minutes at a time. Evening is the ideal time for soaking. It helps induce sleep. With its safety-focusing system of hi-technology, Cristina overflow tub supports Hydrothermal therapy to your bathing with reliability and satisfaction.

Aromatherapy

Aromatherapy is the art and science of using essential oils from various plant sources to improve one's health. There are approximately 300 essential oils and related natural aromatic products currently available. But true aromatherapy is not simply a matter of using fragrant products. One of the most delightful ways of experiencing an aromatherapy treatment is in the bath. Add up to 10 drops to the water just before getting in, swoosh the water and let yourself unwind and relax... or surround yourself with scented candles while soaking. Cristina overflow tub enhances your aromatherapy bathing to perfect without the trace of the essential oil left in the tub because it uses the quality material which preserves the environment. Absolutely, its feature and surface are rapid draining of humidity, easy-to-clean and durable-for-scratch.

Hydrotherapy

Hydrotherapy, or water therapy, is one of the oldest, safest, and least expensive met treating many common ailments. Nowadays it is very popular at world-class health nearly everywhere, but with the advent of hydro-massage whirlpools. It can experienced in the comfort and privacy of one's own home. Having a whirlpool spa master bath is like having a personal masseuse available 24 hours a day, 7 days without the cost and inconvenience. The warmth of the whirlpool's hot water muscular pain and stiffness, while its hydro massage feature relaxes the body and cl mind. The water and air (or air alone) forced through the jet nozzles of the whirlpool such an action - - whether to unwind from the complexities of everyday life, to muscular pain, or just to allow more restful sleep. Hydrotherapy contributes to we naturally. For the highly benefit, Christina overflow bathtub designs with inte engineering of the whirlpool or/and air-pool jets with suitable positions which can muscle tensions in six areas of the body: neck, shoulder, mid-back, lower back, and feet.

Ozone therapy

Ozone is an activated, trivalent (three atoms) form of oxygen. Oxygen is O_2 whereas O_3. Ozone is viruscidal germicidal, bactericidal, and fungicidal elimination.Ozone itself is subdivided into a number of different methods, some of which self-administered with an Oxygen cylinder and a medical Ozone generator. These include Ozonating water (useful for bladder, stomach and kidney problems in par vaginal/bladder insufflations for reproductive and genito-urinary problems, ear insu for problems of the ears, eyes, sinuses and brain, and rectal insufflations for problem colon. Ozone bathing increases ozone air which is insufflated into the blood cir through the breath and skin. It is similar to auto-haemotherapy where blood mix Ozone eliminating the diseases and increasing pure air to the direct intra-venous in rather like dialysis. Cristina overflow bathtub offers Ozone therapy option to your bathi its newly developed purifier and ozonizer. It functions sterilization and deodorizatio not only makes pure air and pure water, but also truly offers health benefit to the bo mind as mentioned above.

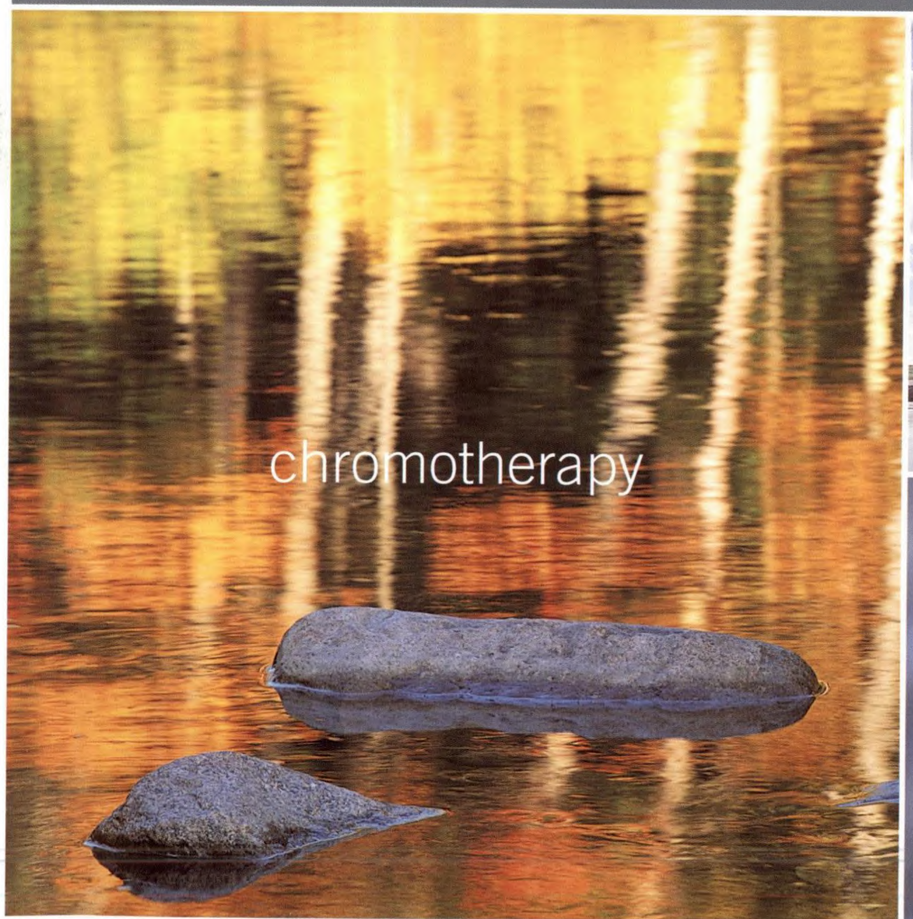



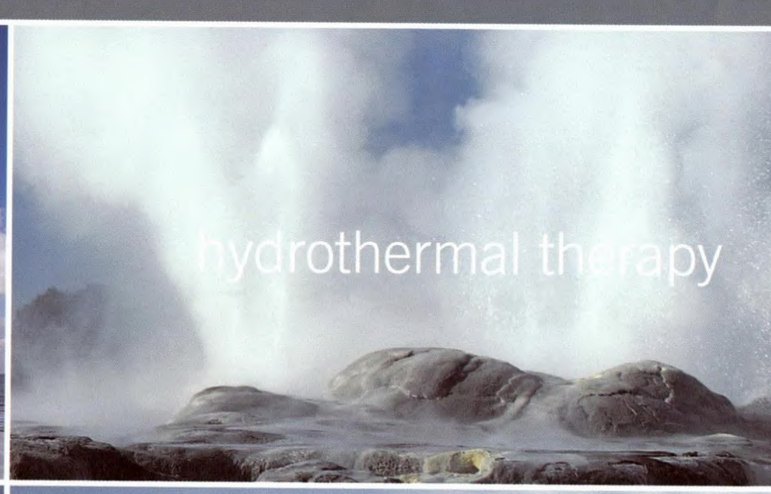



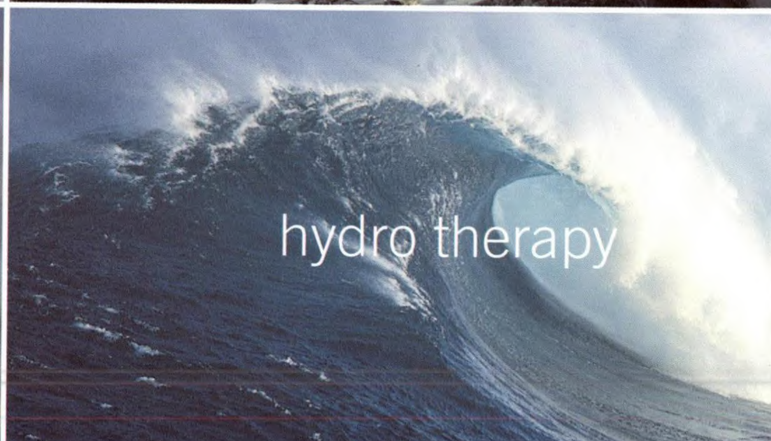

ELECT (with apron)

x 90 x 60 cm.

er : Chat Kamioka / Japan

	Standard colour	Premium Colour
Tub (CT-SL180090BT)	63,000.-	66,000.-
lpool (CT-SL180090WP) ndard Jets	99,000.-	102,000.-
lpool + Airpool (CT-SL180090WA) ndard Jets, 14 Airpool Jets	129,000.-	132,000.-

H FAUCET

Tub (CT-SL180090FBT)	93,000.-	96,000.-
lpool (CT-SL180090FWP) ndard Jets	129,000.-	132,000.-
lpool + Airpool (CT-SL180090FWA) ndard Jets, 14 Airpool Jets	159,000.-	162,000.-

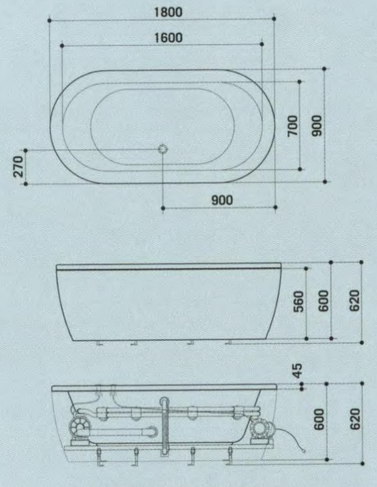

SIZE 1800 x 900 x 600 MM.

Chromotherapy 2 Lights 30,000

SELECT

180 x 90 x 46 cm.

Designer : Chat Kamioka / Japan

	Standard colour	Premium C
Bath Tub (CT-SL180090BT)	33,000.-	36,0
Whirlpool (CT-SL180090WP) 8 Standard Jets	69,000.-	72,0
Whirlpool + Airpool (CT-SL180090WA) 8 Standard Jets, 14 Airpool Jets	99,000.-	102,0

WITH FAUCET

Bath Tub (CT-SL180090FBT)	63,000.-	66,0
Whirlpool (CT-SL180090FWP) 8 Standard Jets	99,000.-	102,0
Whirlpool + Airpool (CT-SL180090FWA) 8 Standard Jets, 14 Airpool Jets	129,000.-	132,0

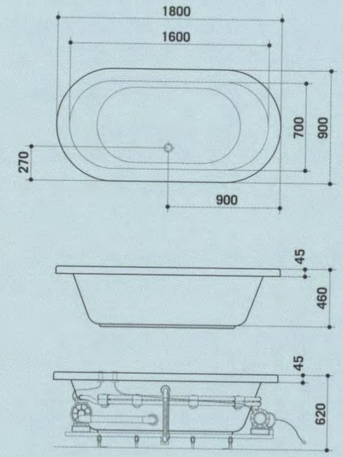

SIZE 1800 x 900 x 460 MM.

Chromotherapy 2 Lights 30,000

ADIUS

0 x 50 cm.

er : Kani Rossi / Italy

	Standard colour	Premium Colour
Tub (CT-RA180000BT)	75,000.-	79,000.-
pool (CT-RA180000WP) pool Jets, 7 Standard Jets	145,000.-	149,00.-
pool + Airpool (CT-RA180000WA) lpool Jets, 7 Standard Jets, 14 Airpool Jets	185,000.-	189,000.-

FAUCET

Tub (CT-RA180000FBT)	105,000.-	109,000.-
lpool (CT-RA180000FWP) rpool Jets, 7 Standard Jets	175,000.-	179,000.-
lpool + Airpool (CT-RA180000FWA) rlpool Jets, 7 Standard Jets, 14 Airpool Jets	215,000.-	219,000.-

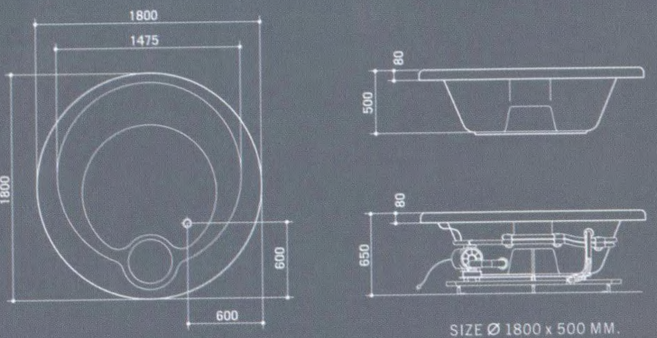

SIZE Ø 1800 x 500 MM.

Chromotherapy 3 Lights 35,000

KIKI

Ø 160 x 48 cm.

Designer : Kani Rossi / Italy

	Standard colour	Premium
Bath Tub (CT-KI160000BT)	57,800.-	59,
Whirlpool (CT-KI160000WP) 6 Whirlpool Jets	117,700.-	119,
Whirlpool + Airpool (CT-KI160000WA) 6 Whirlpool Jets, 12 Airpool Jets	154,500.-	156,

WITH FAUCET

Bath Tub (CT-KI160000FBT)	87,800.-	89,
Whirlpool (CT-KI160000FWP) 6 Whirlpool Jets	147,700.-	149,
Whirlpool + Airpool (CT-KI160000FWA) 6 Whirlpool Jets, 12 Airpool Jets	184,500.-	186,

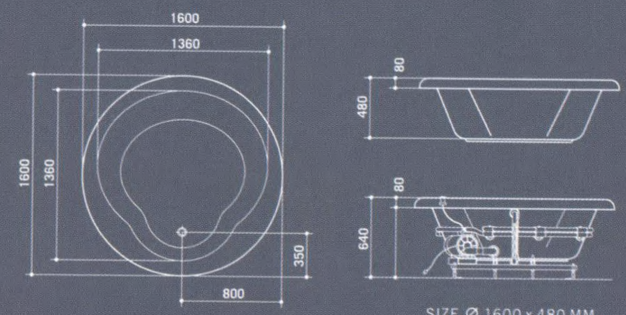

SIZE Ø 1600 x 480 MM.

Chromotherapy 3 Lights 35,000

OMA

70 x 48 cm.

er : Kani Rossi / Italy

	Standard colour	Premium Colour
Tub (CT-RO170000BT)	68,200.-	71,200.-
pool (CT-RO170000WP) lpool Jets	136,100.-	139,100.-
pool + Airpool (CT-RO170000WA) lpool Jets, 13 Airpool Jets	172,900.-	175.900.-

FAUCET

Tub (CT-RO170000FBT)	98,200.-	101,200.-
lpool (CT-RO170000FWP) lpool Jets	166,100.-	169,100.-
lpool + Airpool (CT-RO170000FWA) lpool Jets, 13 Airpool Jets	202,900.-	205,900.-

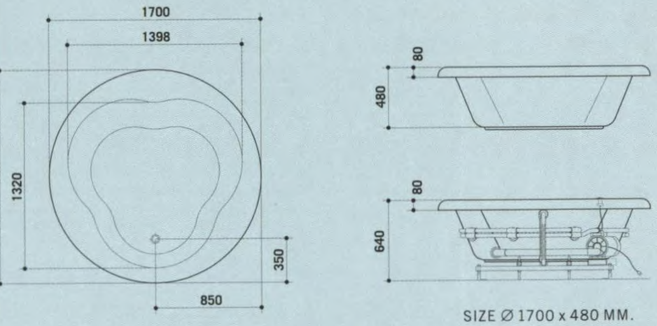

SIZE Ø 1700 x 480 MM.

Chromotherapy 3 Lights 35,000

OPEN

Ø 180 x 120 x 45 cm.

Designer : Phundof Joop / Germany

	Standard colour	Premium
Bath Tub (CT-OP180120BT)	62,600.-	64,6
Whirlpool (CT-OP180120WP) 6 Whirlpool Jets	110,300.-	112,3
Whirlpool + Airpool (CT-OP180120WA) 6 Whirlpool Jets, 12 Airpool Jets	139,800.-	141,8

WITH FAUCET

Bath Tub (CT-OP180120FBT)	77,600.-	79,6
Whirlpool (CT-OP180120FWP) 6 Whirlpool Jets	125,300.-	127,3
Whirlpool + Airpool (CT-OP180120FWA) 6 Whirlpool Jets, 12 Airpool Jets	154,800.-	156,8

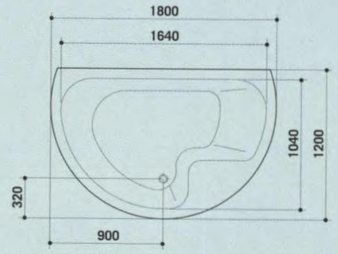

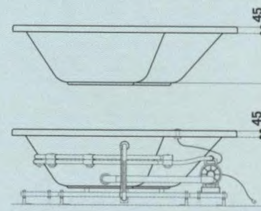

SIZE 1800 x 1200 x 450 MM.

Chromotherapy 2 Lights 30,000

LK

er : Phundof Joop / Germany

LK-A

x 120 x 50 cm.

FAUCET	Standard colour	Premium Colour
Tub (CT-SI-A200120BT)	57,800.-	60,800.-
lpool (CT-SI-A200120WP) ndard Jets	110,300.-	113,300.-
lpool + Airpool (CT-SI-A200120WA) ndard Jets, 12 Airpool Jets	145,200.-	148,200.-

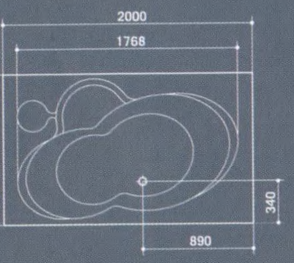

SIZE 2000 x 1200 x 500 MM.

LK-B

x 120 x 50 cm.

H FAUCET	Standard colour	Premium Colour
Tub (CT-SI-B190120BT)	52,200.-	55,200.-
rlpool (CT-SI-B190120WP) ndard Jets	73,600.-	78,600.-
rlpool + Airpool (CT-SI-B190120WA) ndard Jets, 12 Airpool Jets	103,000.-	106,000.-

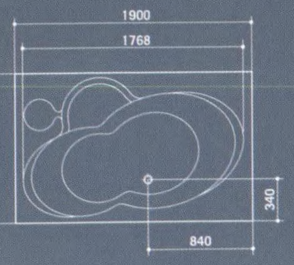

SIZE 1900 x 1200 x 500 MM.

Chromotherapy 2 Lights 30,000



Chromotherapy 2 Lights 30,000

CARNIVAL

Designer : Phundof Joop / Germany

CARNIVAL-A

200 x 120 x 46 cm.

	Standard colour	Premium
Bath Tub (CT-CV-A200120BT)	57,800.-	61,8
Whirlpool (CT-CV-A200120WP) 8 Standard Jets	110,300.-	114,3
Whirlpool + Airpool (CT-CV-A200120WA) 8 Standard Jets, 15 Airpool Jets	139,200.-	143,2
WITH FAUCET		
Bath Tub (CT-CV-A200120FBT)	77,800.-	81,8
Whirlpool (CT-CV-A200120FWP) 8 Standard Jets	130,300.-	133,3
Whirlpool + Airpool (CT-CV-A200120FWA) 8 Standard Jets, 15 Airpool Jets	159,800.-	162,8

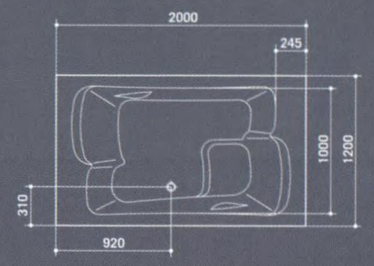

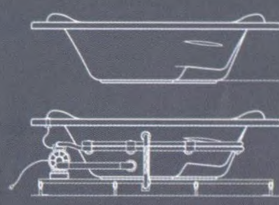

SIZE 2000 x 1206 x 460 MM.

CARNIVAL-B

190 x 120 x 46 cm.

	Standard colour	Premium
Bath Tub (CT-CV-B190120BT)	30,000.-	34,0
Whirlpool (CT-CV-B190120WP) 8 Standard Jets	60,000.-	64,0
Whirlpool + Airpool (CT-CV-B190120WA) 8 Standard Jets, 15 Airpool Jets	90,000.-	94,0
WITH FAUCET		
Bath Tub (CT-CV-B190120FBT)	50,000.-	54,0
Whirlpool (CT-CV-B190120FWP) 8 Standard Jets	80,000.-	84,0
Whirlpool + Airpool (CT-CV-B190120FWA) 8 Standard Jets, 15 Airpool Jets	110,000.-	114,0

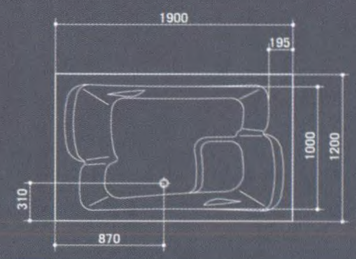

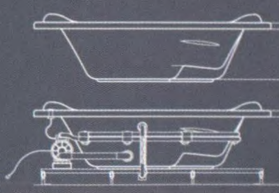

SIZE 1900 x 1200 x 460 MM.

AGA

x 110 x 45 cm.

ner: Kani Rossi / Italy

H FAUCET	Standard colour	Premium Colour
n Tub (CT-NA190110BT)	57,800.-	60,800.-
rlpool (CT-NA190110WP) rlpool Jets	110,300.-	113,300.-
rlpool + Airpool (CT-NA190110WA) rlpool Jets, 12 Airpool Jets	139,800.-	142,800.-

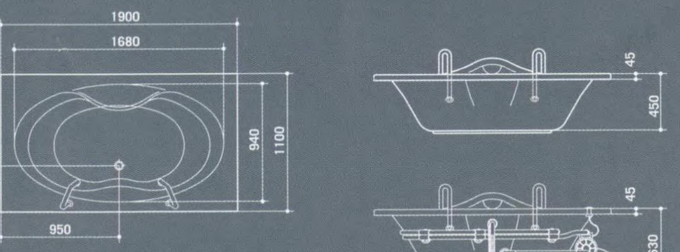

SIZE 1900 x 1100 x 450 MM.

Chromotherapy 2 Lights 30,000

CHAT

180 x 90 x 48 cm.

Designer : Chat Kamioka / Japan

	Standard colour	Premium Colo
Bath Tab (CT-CH180090BT)	20,100.-	23,100.
Whirlpool (CT-CH180090WP) 6 Slim Jets	58,900.-	61,900.
Whirlpool + Airpool (CT-CH180090WA) 6 SlimJets, 12 Airpool Jets	92,000.-	95,000.
WITH FAUCET		
Bath Tab (CT-CH180090FBT)	32,600.-	35,600.
Whirlpool (CT-CH180090FWP) 6 Slim JetS	71,400.-	74,400.
Whirlpool + Airpool (CT-CH180090FWA) 6 Slim Jets, 12 Airpool Jets	104,500.-	107,500.

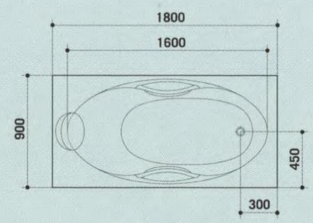

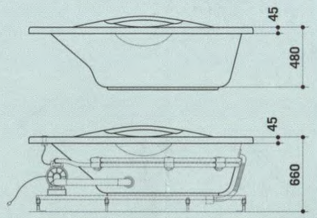

SIZE 1800 x 900 x 480 MM.

MITO

80 x 90 x 45 cm.

esigner : Chat Kamioka / Japan

	Standard colour	Premium Colour
Bath Tub (CT-MI180090BT)	20,100.-	23,100.-
Whirlpool (CT-MI180090WP) 6 Slim Jets	58,900.-	61,900.-
Whirlpool + Airpool (CT-MI180090WA) 6 Slim Jets, 12 Airpool Jets	92,000.-	95,000.-
WITH FAUCET		
Bath Tub (CT-MI180090FBT)	32,600.-	35,600.-
Whirlpool (CT-MI180090FWP) 6 Slim Jets	71,400.-	74,400.-
Whirlpool + Airpool (CT-MI180090FWA) 6 Slim Jets, 12 Airpool Jets	104,500.-	107,500.-

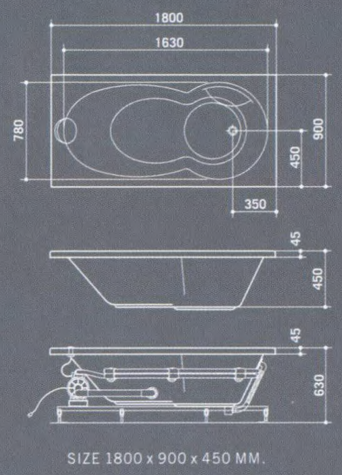

SIZE 1800 x 900 x 450 MM.



Chromotherapy 2 Lights 30,000

BACIO

85 x 105 x 40 cm.

esigner : Phundof Joop / Germany

	Standard colour	Premium Colour
Bath Tub (CT-9010BT)	23,300.-	26,300.-
Whirlpool (CT-9911WP) Slim Jets	54,300.-	57,300.-
Whirlpool + Airpool (CT-9910WA) Slim Jets, 8 Airpool Jets	84,800.-	87,800.-
WITH FAUCET		
Bath Tub (CT-9010FBT)	38,300.-	41,300.-
Whirlpool (CT-9911FWP) Slim Jets	69,300.-	72,300.-
Whirlpool + Airpool (CT-9910FWA) Slim Jets, 8 Airpool Jets	92,000.-	95,000.-

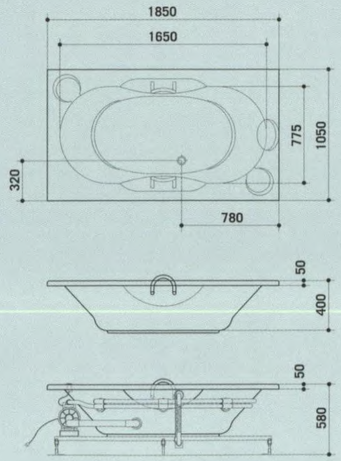

SIZE 1850 x 1050 x 400 MM.



Chromotherapy 2 Lights 30,000



Chromotherapy 2 Lights 30,000

MODA

190 x 110 x 45 cm.

Designer : Kani Rossi / Italy

	Standard colour	Premium Colour
Bath Tub (CT-MO190110BT)	27,400.-	31,400.-
Whirlpool (CT-MO190110WP) 6 Standard Jets	52,400.-	56,400.-
Whirlpool + Airpool (CT-MO190110WA) 6 Standard Jets, 12 Airpool Jets	81,600.-	85,600.-

WITH FAUCET

Bath Tub (CT-MO190110FBT)	39,700.-	43,700.-
Whirlpool (CT-MO190110FWP) 6 Standard Jets	61,900.-	65,900.-
Whirlpool + Airpool (CT-MO190110FWA) 6 Standard Jets, 12 Airpool Jets	96,100.-	100,100.-

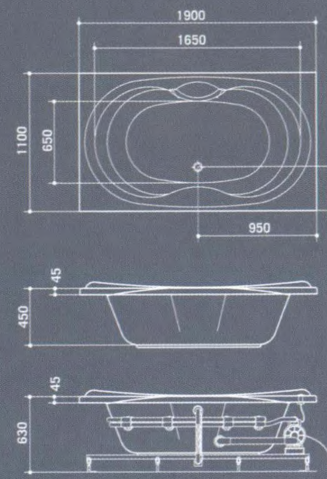

SIZE 1900 x 1100 x 450 MM.



Chromotherapy 2 Lights 30,000

SQUARE

150 x 150 x 45 cm.

Designer : Kani Rossi / Italy

	Standard colour	Premium Colour
Bath Tub (CT-SQ150150BT)	72,200.-	74,200.-
Whirlpool (CT-SQ150150WP) 4 Whirlpool Jets, 2 Standard Jets	132,400.-	134,400.-
Whirlpool + Airpool (CT-SQ150150WA) 4 Whirlpool Jets, 2 Standard Jets 16 Airpool Jets	161,800.-	165,800.-

WITH FAUCET

Bath Tub (CT-SQ150150FBT)	102,200.-	103,200.-
Whirlpool (CT-SQ150150FWP) 4 Whirlpool Jets, 2 Standard Jets	162,400.-	165,400.-
Whirlpool + Airpool (CT-SQ150150FWA) 4 Whirlpool Jets, 2 Standard Jets 16 Airpool Jets	191,800.-	195,800.-

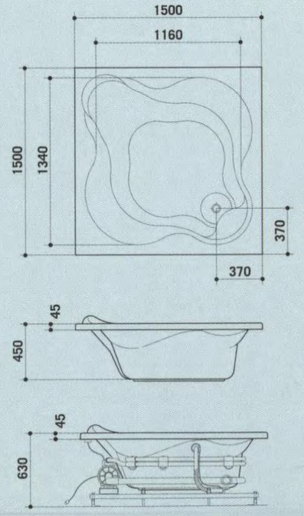

SIZE 1500 x 1500 x 450 MM.

REGAL

00 x 120 x 55 cm.

esigner : Chat Kamioka / Japan

	Standard colour	Premium Colour
ath Tub (CT-RE190120BT)	50,000.-	53,000.-
hirlpool (CT-RE190120WP) Standard Jets, 8 Whirlpool Jets	85,000.-	88,000.-
hirlpool + Airpool (CT-RE190120WA) Standard Jets, 8 Whirlpool Jets, 14 Airpool jets	110,000.-	113,000.-
hirlpool + Airpool (CT-RE190120BJ FJ) Standard Jets, 8 Whirlpool Jets, 14 Airpool Jets, 12 Micro Jets	125,000.-	129,000.-

ITH FAUCET

ath Tub (CT-RE190120FBT)	80,000.-	83,000.-
hirlpool (CT-RE190120FWP) Standard Jets, 8 Whirlpool Jets	115,000.-	118,000.-
hirlpool + Airpool (CT-RE190120FWA) Standard Jets, 8 Whirlpool Jets, 14 Airpool Jets	140,000.-	143,000.-
hirlpool + Airpool (CT-RE190120FBJ FJ) Standard Jets, 8 Whirlpool Jets, 14 Airpool Jets, 12 Micro Jets	155,000.-	159,000.-

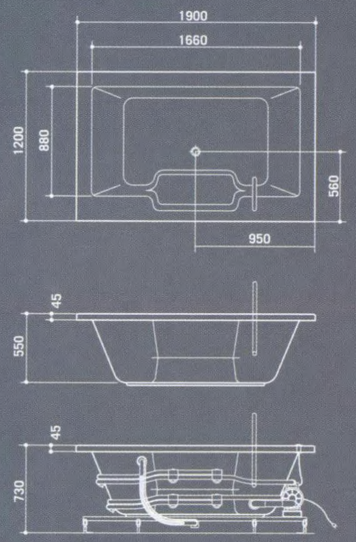

SIZE 1900 x 1200 x 550 MM.



EISURE

5 x 90 x 47 cm.

igner : Chat Kamioka / Japan

	Standard colour	Premium Colour
th Tub (CT-LE185090BT)	30,000.-	33,000.-
hirlpool (CT-LE185090WP) tandard Jets	60,000.-	63,000.-
hirlpool + Airpool (CT-LE185090WA) tandard Jets, 14 Airpool Jets	85,000.-	88,000.-

TH FAUCET

th Tub (CT-LE185090FBT)	60,000.-	63,000.-
hirlpool (CT-LE185090FWP) tandard Jets	90,000.-	93,000.-
hirlpool + Airpool (CT-LE185090FWA) tandard Jets, 14 Airpool Jets	115,000.-	118,000.-

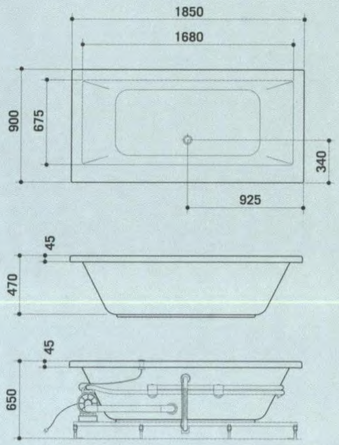

SIZE 1850 x 900 x 470 MM.





FLASH

180 x 90 x 42 cm.

Designer : Chat Kamioka / Japan

	Standard colour	Premium Colour
Bath Tub (CT-FL180090BT)	20,100.-	23,100.-
Whirlpool (CT-FL180090WP) 6 Slim Jets	58,900.-	61,900.-
Whirlpool + Airpool (CT-FL180090WA) 6 Slim Jets, 12 Airpool Jets	92,000.-	95,000.-

WITH FAUCET

Bath Tub (CT-FL180090FBT)	50,100.-	53,100.-
Whirlpool (CT-FL180090FWP) 6 Slim Jets	88,900.-	91,900.-
Whirlpool + Airpool (CT-FL180090FWA) 6 Slim Jets, 12 Airpool Jets	122,000.-	125,000.-

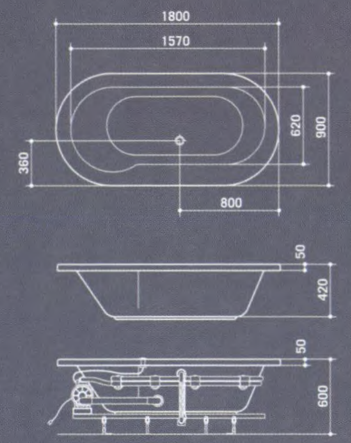

SIZE 1800 x 900 x 420 MM.



SEASON

185 x 90 x 47 cm.

Designer : Phundof Joop / Germany

	Standard colour	Premium Colour
Bath Tub (CT-SS185090BT)	32,000.-	35,000.-
Whirlpool (CT-SS185090WP) 8 Standard Jets	68,000.-	71,000.-
Whirlpool + Airpool (CT-SS185090WA) 8 Standard Jets, 12 Airpool Jets	98,000.-	101,000.-

WITH FAUCET

Bath Tub (CT-SS185090FBT)	62,000.-	65,000.-
Whirlpool (CT-SS185090FWP) 8 Standard Jets	98,000.-	101,000.-
Whirlpool + Airpool (CT-SS185090FWA) 8 Standard Jets, 12 Airpool Jets	128,000.-	131,000.-

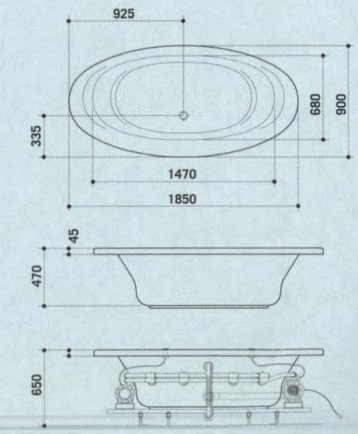

SIZE 1850 x 900 x 470 MM.

BELLE

85 x 95 x 47 cm.

esigner : Phundof Joop / Germany

	Standard colour	Premium Colour
Bath Tub (CT-BL185095BT)	38,000.-	41,000.-
Whirlpool (CT-BL185095WP) 6 Standard Jets	74,000.-	77,000.-
Whirlpool + Airpool (CT-BL185095WA) 6 Standard Jets, 12 Airpool Jets	104,000.-	107,000.-
WITH FAUCET		
Bath Tub (CT-BL185095FBT)	58,000.-	61,000.-
Whirlpool (CT-BL185095FWP) 6 Standard Jets	94,000.-	97,000.-
Whirlpool + Airpool (CT-BL185095FWA) 6 Standard Jets, 12 Airpool Jets	124,000.-	127,000.-

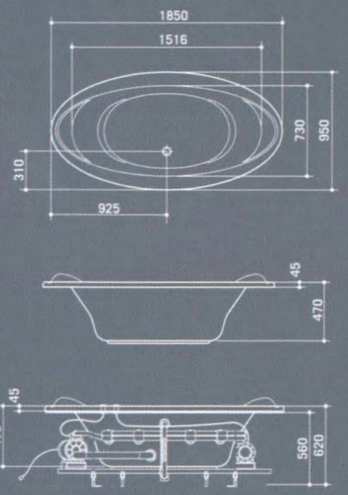

SIZE 1850 x 950 x 470 MM.



Chromotherapy 2 Lights 30,000

BELLE (with apron)

85 x 95 x 60 cm. (with apron)

esigner : Phundof Joop / Germany

	Standard colour	Premium Colour
Bath Tub (CT-BL185095BT)	68,000.-	71,000.-
Whirlpool (CT-BL185095WP) 6 Standard Jets	104,000.-	107,000.-
Whirlpool + Airpool (CT-BL185095WA) 6 Standard Jets, 12 Airpool Jets	134,000.-	137,000.-
WITH FAUCET		
Bath Tub (CT-BL185095FBT)	88,000.-	91,000.-
Whirlpool (CT-BL185095FWP) 6 Standard Jets	124,000.-	127,000.-
Whirlpool + Airpool (CT-BL185095FWA) 6 Standard Jets, 12 Airpool Jets	154,000.-	157,000.-

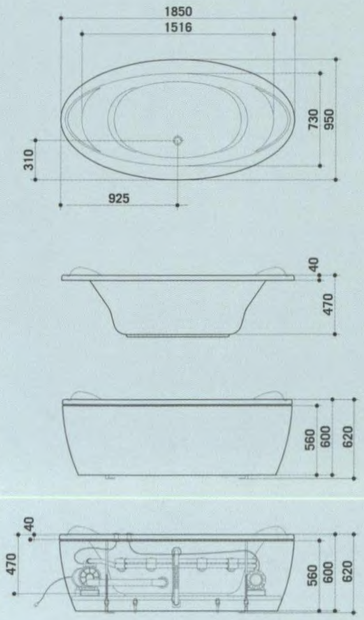

SIZE 1850 x 950 x 600 MM.



Chromotherapy 2 Lights 30,000



Chromotherapy 2 Lights 30,000

CANOVA

180 x 100 x 49 cm.

Designer : Kani Rossi / Italy

	Standard colour	Premium Colour
Bath Tub (CT-CA180100BT)	24,100.-	27,100.-
Whirlpool (CT-CA180100WP) 6 Whirlpool Jets	62,500.-	65,500.-
Whirlpool + Airpool (CT-CA180100WA) 6 Whirlpool Jets, 8 Airpool Jets	95,600.-	98,600.-

WITH FAUCET

Bath Tub (CT-CA180100FBT)	54,100.-	57,100.-
Whirlpool (CT-CA180100FWP) 6 Whirlpool Jets	92,500.-	95,500.-
Whirlpool + Airpool (CT-CA180100FWA) 6 Whirlpool Jets, 8 Airpool Jets	125,600.-	128,600.-

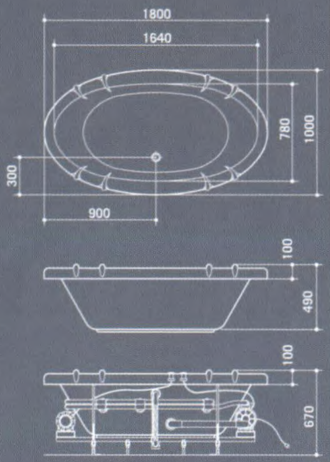

SIZE 1800 x 1000 x 490 MM.



Chromotherapy 2 Lights 30,000

BARI

150 x 150 x 45 cm.

Designer : Phundof Joop / Germany

	Standard colour	Premium Colour
Bath Tub (CT-BA150150BT)	72,200.-	74,200.-
Whirlpool (CT-BA150150WP) 6 Whirlpool Jets	132,400.-	134,400.-
Whirlpool + Airpool (CT-BA150150WA) 6 Whirlpool Jets, 18 Airpool jets	161,800.-	163,800.-

WITH FAUCET

Bath Tub (CT-BA150150FBT)	102,200.-	104,200.-
Whirlpool (CT-BA150150FWP) 6 Whirlpool Jets	162,400.-	164,400.-
Whirlpool + Airpool (CT-BA150150FWA) 6 Whirlpool Jets, 18 Airpool jets	191,800.-	195,800.-

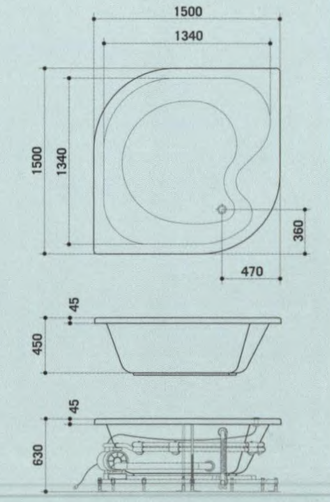

SIZE 1500 x 1500 x 450 MM.

SERRE

45 x 145 x 45 cm. (Height Over all 62 cm.)

signer : Kani Rossi / Italy

	Standard colour	Premium Colour
Bath Tub (CT-SE145145BT)	25,700.-	29,700.-
Whirlpool (CT-SE145145WP) 6 Whirlpool Jets	66,200.-	70,200.-
Whirlpool + Airpool (CT-SE145145WA) 6 Standard Jets, 10 Airpool Jets	99,300.-	103,300.-

WITH FAUCET

Bath Tub (CT-SE145145FBT)	38,200.-	42,200.-
Whirlpool (CT-SE145145FWP) 6 Whirlpool Jets	78,700.-	82,700.-
Whirlpool + Airpool (CT-SE145145FWA) 6 Whirlpool Jets, 10 Airpool Jets	111,800.-	115,800.-

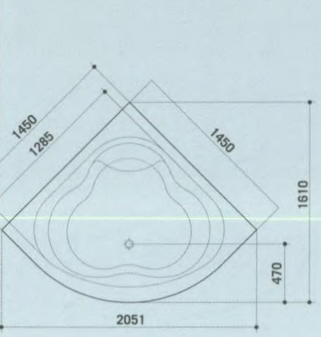

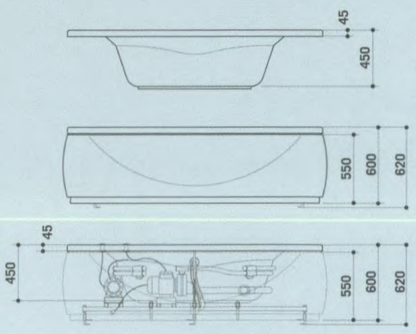

FRONT SKIRT-550 MM.HEIGHT
SIZE 1450 x 1450 x 450 MM.
(FRONT SKIRT-550 MM. HEIGHT)

Chromotherapy 2 Lights 30,000

KYOTO

160 x 160 x 47 cm. (Height Over all 62 cm.)

Designer : Chat Kamioka / japan

	Standard colour	Premium Colou
Bath Tub (CT-KY160160BT)	62,600.-	66,600.-
Whirlpool (CT-KY160160WP) 7 Slim Jets	117,700.-	121,700.-
Whirlpool + Airpool (CT-KY160160WA) 7 Slim Jets, 15 Airpool Jets	147,100.-	151,000.-

WITH FAUCET

Bath Tub (CT-KY160160FBT)	77,600.-	81,600.-
Whirlpool (CT-KY160160FWP) 7 Slim Jets	132,700.-	136,700.-
Whirlpool + Airpool (CT-KY160160FWA) 7 Slim Jets, 15 Airpool Jets	162,100.-	166,100.-

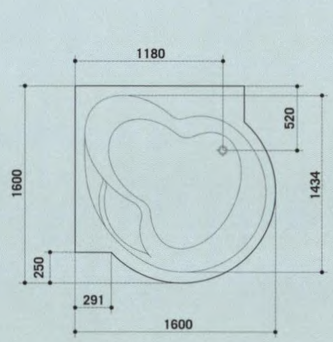

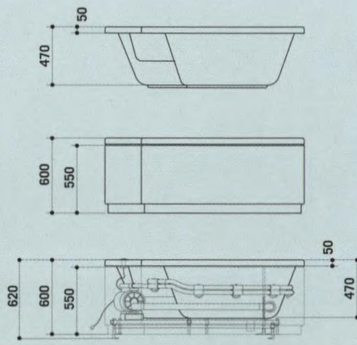

FRONT SKIRT-550 MM.HEIGHT
SIZE 1600 x 1600 x 600 MM.
(FRONT SKIRT-550 MM. HEIGHT)

Chromotherapy 2 Lights 30,000



Chromotherapy 2 Lights 30,000

TUBBY

120 x 120 x 45 cm. (Height Over all 62 cm.)

Designer : Kani Rossi / Italy

	Standard colour	Premium Colour
Bath Tub (CT-9031BT)	15,200.-	18,200.-
Whirlpool (CT-9931WP) 6 Standard Jets	46,500.-	49,500.-
Whirlpool + Airpool (CT-9931WA) 6 Standard Jets, 8 Airpool Jets	63,700.-	66,700.-

WITH FAUCET

Bath Tub (CT-9031FBT)	27,700.-	30,700.-
Whirlpool (CT-9931FWP) 6 Standard Jets	59,000.-	62,000.-
Whirlpool + Airpool (CT-9931FWA) 6 Standard Jets, 8 Airpool Jets	76,200.-	79,200.-

TOSCANA

130 x 130 x 45 cm. (Height Over all 62 cm.)

Designer : Kani Rossi / Italy

	Standard colour	Premium Colour
Bath Tub (CT-9030BT)	17,500.-	20,500.-
Whirlpool (CT-9930WP) 6 Standard Jets	53,000.-	56,000.-
Whirlpool + Airpool (CT-9930WA) 6 Standard Jets, 10 Airpool Jets	68,900.-	71,900.-

WITH FAUCET

Bath Tub (CT-9030FBT)	30,000.-	33,000.-
Whirlpool (CT-9930FWP) 6 Standard Jets	65,900.-	68,900.-
Whirlpool + Airpool (CT-9930FWA) 6 Standard Jets, 10 Air pool Jets	81,400.-	83,400.-

TIPTOP

145 x 145 x 45 cm. (Height Over all 62 cm.)

Designer : Kani Rossi / Italy

	Standard colour	Premium Colour
Bath Tub (CT-9032BT)	25,000.-	28,000.-
Whirlpool (CT-9932WP) 6 Standard Jets	55,000.-	58,000.-
Whirlpool + Airpool (CT-9932WA) 6 Standard Jets, 10 Airpool Jets	80,000.-	88,000.-

WITH FAUCET

Bath Tub (CT-9032FBT)	37,500.-	40,500.-
Whirlpool (CT-9932FWP) 6 Standard Jets	67,500.-	70,500.-
Whirlpool + Airpool (CT-9932FWA) 6 Standard Jets, 10 Airpool Jets	92,500.-	93,500.-

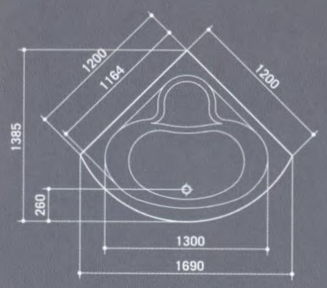

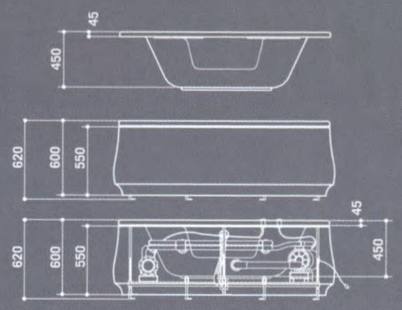

TUBBY

FRONT SKIRT-550 MM. HEIGHT
SIZE 1200 x 1200 x 450 MM. (FRONT SKIRT-550 MM. HEIGHT)

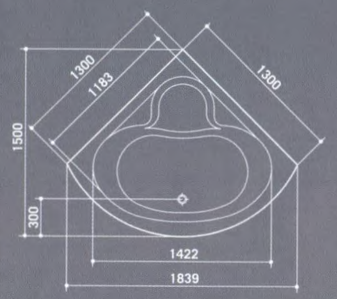

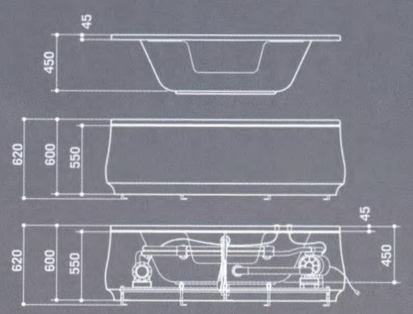

TOSCANA

FRONT SKIRT-550 MM. HEIGHT
SIZE 1300 x 1300 x 450 MM. (FRONT SKIRT-550 MM. HEIGHT)

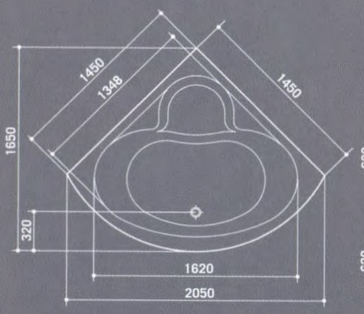

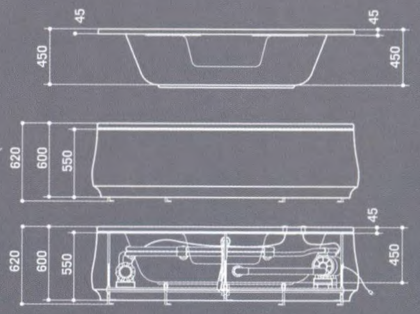

TIPTOP

FRONT SKIRT-550 MM.HEIGHT
SIZE 1450 x 1450 x 450 MM. (FRONT SKIRT-550 MM. HEIGHT)



JAKO

150 x 150 x 45 cm. (Height Over all 62 cm.)

Designer : Kani Rossi / Italy

	Standard colour	Premium Colour
Bath Tub (CT-JA150150BT)	30,000.-	34,000.-
Whirlpool (CT-JA150150WP) 8 Standard Jets	60,000.-	64,000.-
Whirlpool + Airpool (CT-JA150150WA) 8 Standard Jets , 10 Airpool Jets	90,000.-	94,000.-

WITH FAUCET

Bath Tub (CT-JA150150FBT)	45,000.-	49,000.-
Whirlpool (CT-JA150150FWP) 8 Standard Jets	75,000.-	79,000.-
Whirlpool + Airpool (CT-JA150150FWA) 8 Standard Jets 10 Airpool Jets	105,000.-	109,000.-

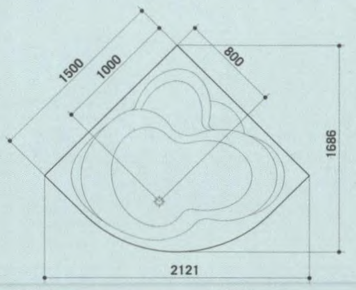

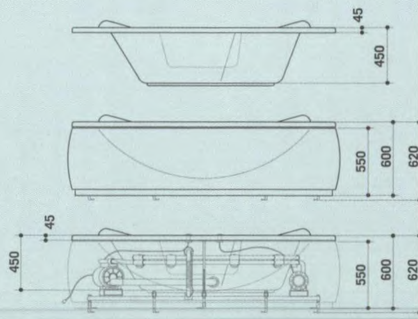

FRONT SKIRT-550 MM. HEIGHT
SIZE 1500 x 1500 x 450 MM. (FRONT SKIRT-550 MM. HEIGH

LOGO

Designer : Phundof Joop / Germany

LOGO-A

180 x 90 x 45 cm. (Height Over all 62 cm.)

	Standard colour	Premium Colour
Bath Tub (CT-LO-A180090BT)	20,100.-	23,100.-
Whirlpool (CT-LO-A180090WP) 6 Standard Jets	58,900.-	61,900.-
Whirlpool + Airpool (CT-LO-A180090WA) 6 Standard Jets, 8 Airpool Jets	92,000.-	95,000.-

WITH FAUCET

Bath Tub (CT-LO-A180090FBT)	32,600.-	35,600.-
Whirlpool (CT-LO-A180090FWP) 6 Standard Jets	71,400.-	74,400.-
Whirlpool + Airpool (CT-LO-A180090FWA) 6 Standard Jets, 8 Airpool Jets	104,500.-	107,500.-

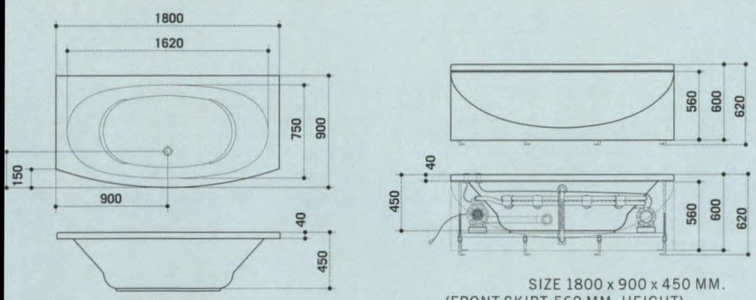

SIZE 1800 x 900 x 450 MM.
(FRONT SKIRT-560 MM. HEIGHT)

LOGO-B

170 x 85 x 40 cm. (Hight Over all 62 cm.)

	Standard colour	Premium Colour
Bath Tub (CT-LO-B170085BT)	14,400.-	17,400.-
Whirlpool (CT-LO-B170085WP) 6 Standard Jets	53,000.-	58,000.-
Whirlpool + Airpool (CT-LO-B170085WA) 6 Standard Jets, 8 Airpool Jets	80,900.-	83,900.-

WITH FAUCET

Bath Tub (CT-LO-B170085FBT)	26,900.-	29,900.-
Whirlpool (CT-LO-B170085FWP) 6 Standard Jets	65,500.-	68,500.-
Whirlpool + Airpool (CT-LO-B170085FWA) 6 Standard Jets, 8 Airpool Jets	93,400.-	97,400.-

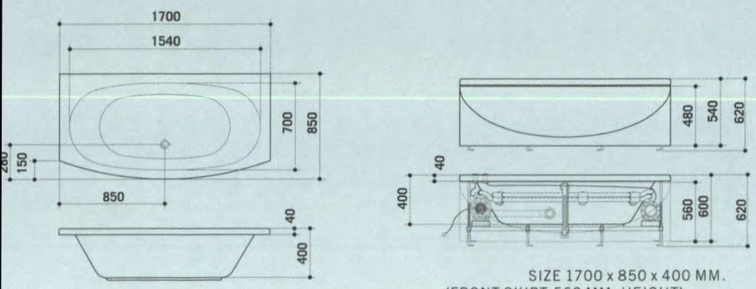

SIZE 1700 x 850 x 400 MM.
(FRONT SKIRT-560 MM. HEIGHT)

Chromotherapy 2 Lights 30,000

Chromotherapy 2 Lights 30,000

VISA

Designer : Kani Rossi / Italy

VISA-R

170 x 85 x 43 cm. (Height Over all 62 cm.)

	Standard colour	Premium Colour
Bath Tub (CT-VI-R170085BT)	16,900.-	19,900.-
Whirlpool (CT-VI-R170085WP) 6 Standard Jets	60,900.-	63,900.-
Whirlpool + Airpool (CT-VI-R170085WA) 6 Standard Jets, 10 Airpool Jets	93,100.-	96,100.-
WITH FAUCET		
Bath Tub (CT-VI-R170085FBT)	29,400.-	32,400.-
Whirlpool (CT-VI-R170085FWP) 6 Standard Jets	73,400.-	76,400.-
Whirlpool + Airpool (CT-VI-R170085FWA) 6 Standard Jets, 10 Airpool Jets	105,600.-	108,600.-

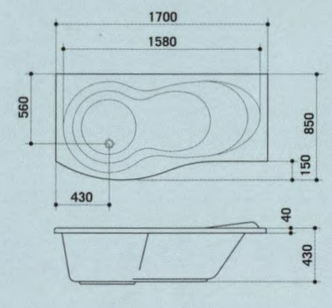

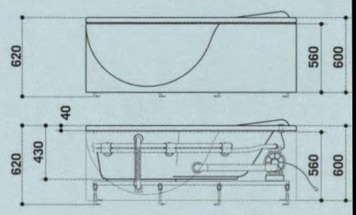

SIZE 1700 x 850 x 430 MM.
(FRONT SKIRT-560 MM. HEIGHT)

VISA-L

170 x 85 x 43 cm. (Height Over all 62 cm.)

	Standard colour	Premium Colour
Bath Tab (CT-VI-L170085BT)	16,900.-	19,900.-
Whirlpool (CT-VI-L170085WP) 6 Standard Jets	60,900.-	63,900.-
Whirlpool + Airpool (CT-VI-L170085WA) 6 Standard Jets, 10 Airpool Jets	93,100.-	96,100.-
WITH FAUCET		
Bath Tab (CT-VI-L170085FBT)	29,400.-	32,400.-
Whirlpool (CT-VI-L170085FWP) 6 Standard Jets	73,400.-	76,400.-
Whirlpool + Airpool (CT-VI-L170085FWA) 6 Standard Jets, 10 Airpool Jets	105,600.-	108,600.-

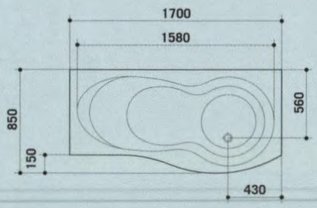

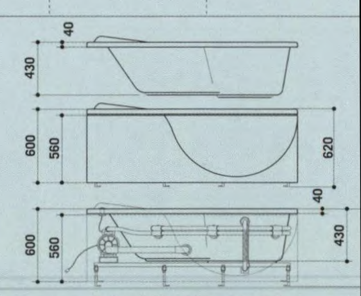

SIZE 1700 x 850 x 430 MM.
(FRONT SKIRT-560 MM. HEIGHT)

KONI

Designer : Phundof Joop / Germany

KONI-R

160 x 90 x 45 cm. (Height Over all 62 cm.)

	Standard colour	Premium Colour
Bath Tub (CT-KO-R160090BT)	14,400.-	16,400.-
Whirlpool (CT-KO-R160090WP) 6 Standard Jets	52,500.-	54,500.-
Whirlpool + Airpool (CT-KO-R160090WA) 6 Standard Jets, 10 Airpool Jets	84,600.-	86,600.-
WITH FAUCET		
Bath Tub (CT-KO-R160090FBT)	26,900.-	28,900.-
Whirlpool (CT-KO-R160090FWP) 6 Standard Jets	65,000.-	67,000.-
Whirlpool + Airpool (CT-KO-R160090FWA) 6 Standard Jets, 10 Airpool Jets	97,100.-	99,100.-

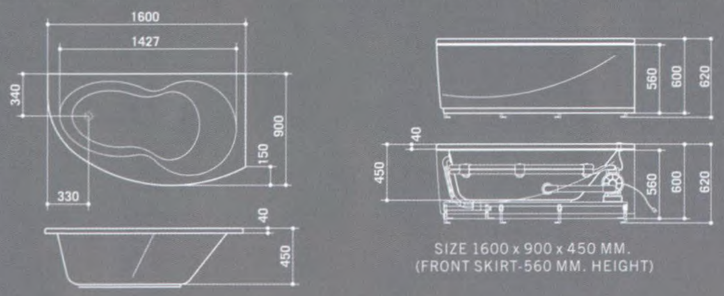

SIZE 1600 x 900 x 450 MM.
(FRONT SKIRT-560 MM. HEIGHT)

KONI-L

160 x 90 x 45 cm. (Height Over all 62 cm.)

	Standard colour	Premium Colour
Bath Tub (CT-KO-L160090BT)	14,400.-	16,400.-
Whirlpool (CT-KO-L160090WP) 6 Standard Jets	52,500.-	54,500.-
Whirlpool + Airpool (CT-KO-L160090WA) 6 Standard Jets, 10 Airpool Jets	84,600.-	86,600.-
WITH FAUCET		
Bath Tub (CT-KO-L160090FBT)	26,900.-	28,900.-
Whirlpool (CT-KO-L160090FWP) 6 Standard Jets	65,000.-	67,000.-
Whirlpool + Airpool (CT-KO-L160090FWA) 6 Standard Jets, 10 Airpool Jets	97,100.-	99,100.-

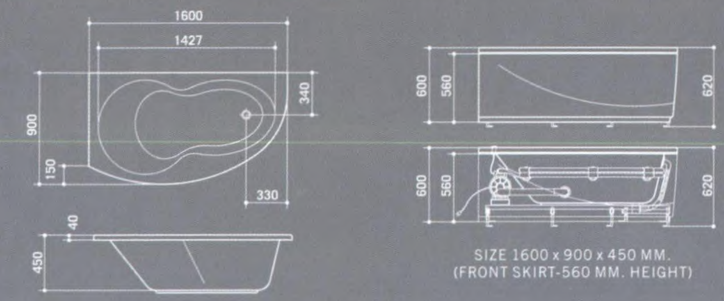

SIZE 1600 x 900 x 450 MM.
(FRONT SKIRT-560 MM. HEIGHT)

Chromotherapy 2 Lights 30,000

Chromotherapy 2 Lights 30,000

ZOOM

Designer : Phundof Joop / Germany

ZOOM-A

170 x 85 x 40 cm. (Height Over all 62 cm.)

	Standard colour	Premium Colour
Bath Tub (CT-ZO-A170085BT)	13,200.-	15,200.-
Whirlpool (CT-ZO-A170085WP) 6 Standard Jets	49,300.-	52,300.-
Whirlpool + Airpool (CT-ZO-A170085WA) 6 Standard Jets, 8 Airpool Jets	77,200.-	80,200.-
WITH FAUCET		
Bath Tub (CT-ZO-A170085BT)	28,200.-	31,200.-
Whirlpool (CT-ZO-A170085WP) 6 Standard Jets	64,300.-	67,300.-
Whirlpool + Airpool (CT-ZO-A170085WA) 6 Standard Jets, 8 Airpool Jets	92,200.-	95,200.-

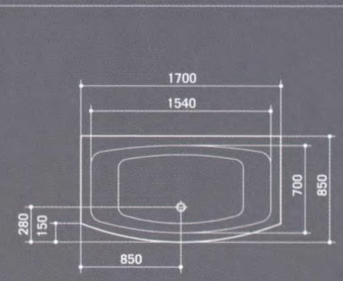

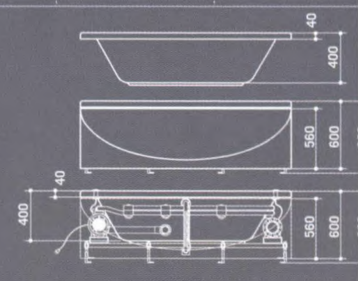

SIZE 1700 x 850 x 400 MM.
FRONT SKIRT-560 MM.HEIGHT

ZOOM-B

160 x 85 x 40 cm. (Height Over all 62 cm.)

	Standard colour	Premium Colour
Bath Tub (CT-ZO-B160085BT)	12,400.-	15,400.-
Whirlpool (CT-ZO-B160085WP) 6 Standard Jets	45,600.-	48,600.-
Whirlpool + Airpool (CT-ZO-B160085WA) 6 Standard Jets, 8 Airpool Jets	73,600.-	76,600.-
WITH FAUCET		
Bath Tub (CT-ZO-B160085FBT)	27,400.-	30,400.-
Whirlpool (CT-ZO-B160085FWP) 6 Standard Jets	60,600.-	63,600.-
Whirlpool + Airpool (CT-ZO-B160085FWA) 6 Standard Jets, 8 Airpool Jets	88,600.-	91,600.-

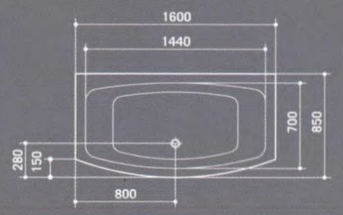

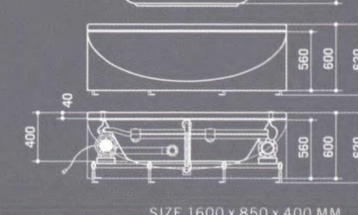

SIZE 1600 x 850 x 400 MM.
FRONT SKIRT-560 MM.HEIGHT

CHROMOTHERAPHY



ENVIRONMENT PRESERVATION

No plywood or chip board inside the layer of ub. Only recycle casting poly-mer to ensure igidity. Environment preservation free from lamp and swell. Retain a brilliant,vibrant gloss ver life time of use.





reaker system
r protection of earth leakage and short rcuit compose of ELB whenever there is y leakage more than 10 mA. Short rcuit breaker will protect any short circuit over current in the system.



LED Light Touch Pad
Classical design for easily use with auto and manual button.



Chromotherapy LED Light
For chromotherapy action with 10 colors using high quality LED from USA or Europe. Sharp color and color change smoothly providing relaxation atmosphere.



Blower with ozone generator
High quality blower provides air flow to air bubble to give a mild massage to body like mum tapping baby. With ozone generator making ozone from intake air to purify water and kill all germs.

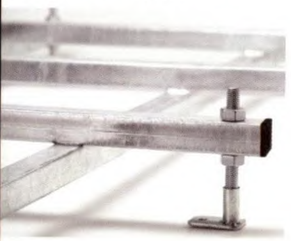

ath cradle
ade of galvanized mild steel for rust proof ith adjustable range 100 mm. supports.

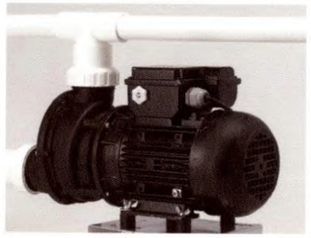

Pump
High quality pump with long life mechanical seal from Europe.



Flow Diverter
For selection locally massage to back jet, neck jet or feet jet

STANDARD COLOR

RCTIC FOX (ARC)

ROYAL TOPAZ (ROY)

IVORY PASTEL (IVP)

PREMIUM COLOR

ARVEST GREEN (HGR)

SAHARA SAND (SAN)

ROSE PETAL (ROS)

WINDSOR GREY (WGR)

SKY BLUE (SKY)

INTER SKIES (SKI)

PERSAIN BLUE (PBL)

BAHAMA BEIGE (BBE)

PASTEL PINK (PIN)

HARVEST BLUE (HBL)

Actual colours on products may differ slightly from Brochure.

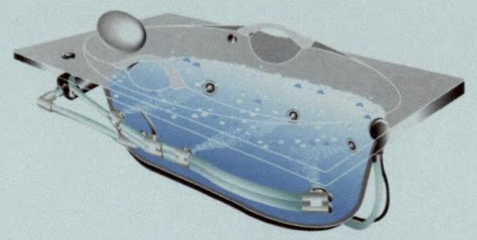

WHIRLPOOL SYSTEM

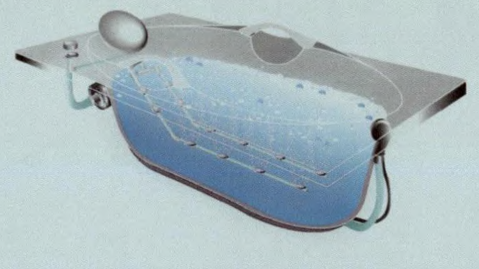

AIRPOOL SYSTEM

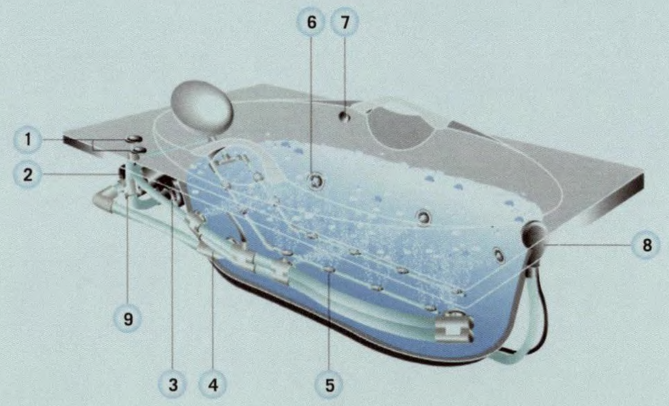

WHIRLPOOL & AIRPOOL SYSTEM

WHIRLPOOL & AIRPOOL SYSTEM

In Cristina whirlpools, you can do more than ju bathing. Relax and take time to enjoy t therapeutic feeling of the water, which sooth andtakes those everyday tensions, aches and pai away. most of our luxurious baths can be fitted wi a Whirlpool, Airpool or whirlpool + Airpool so y needn't settle for just an ordinary bath. Inquire o showroom technician as to the unit of you choice, it could be equipped with any kind system

1 On-Off Switch
- Conveniently located and completely waterproof.
- Desiged with alow profile to please the eye
- With two diameters : 4.25 Cm., 6.5 Cm.

2 Pump
- self-draining.
- UL listed, 220 volt, 50 Hz.

3 Blower
- Quiet running
- 220 volt, 50 Hz.

4 Suction Outlet
- Side mounted incorporating a anti vortex design.
- ABS or Chrome plated brass
- Component diameters : 9.5 Cm. and 10.5 Cm.

5 Airpool Jet
- Chrome - plated
- Flush inset desig
- No water backflo
- Fixture diameter : 3.0 Cm.

6 Various Jet
- Micro Jet
- Standard Jet
- Whirlpool Jet
- Mini Rotary Jet

7 Air Control Valve
- A standard Fitme which allows you adjust the air/wat mixture, so it's je right for you own personal use.

8 Waste & Overflow

9 Check Valve

CIRCUIT BREAKER

All our whirlpool baths are fitted with adual circuit breaker, and a secure grounded earth for you protection
- UL listed 220 volt, 50Hz.
- Fully automated tripping.
- Complete with a sensitivity rating of 30 milliamperes.
- With only one tenth of a second trip.

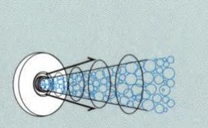

MICRO JET

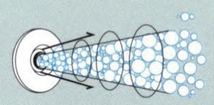

STANDARD JET

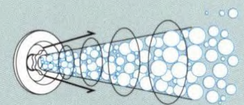

WHIRLPOOL JET

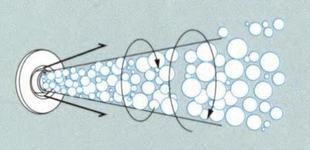

SLIM JET



AIRPOOL JET

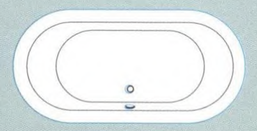

BATHTUB (BT)

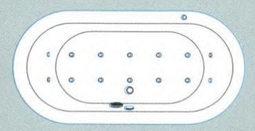

AIRPOOL SYSTEM (AP)

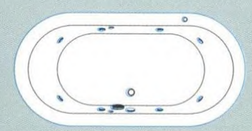

WHIRLPOOL SYSTEM (WP)

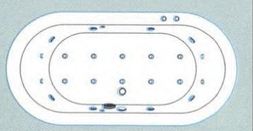

WHIRLPOOL & AIRPOOL SYSTEM (W

Cristina®

For Whom Insist on The Best

CRISTINA SANITARY (THAILAND) CO.,LTD.

1323-1325 SUTTHISANWINICHAI RD., DINDEANG, BANGKOK 10400, THAILAND.

TEL : (662) 693-8866, FAX : (662) 693-8877 WWW.CRISTINA.CO.TH